REHAU®
Unlimited Polymer Solutions

SYSTEM 4500

TECHNICAL INFORMATION
PROFILE PRINT

SYSTEM 4500
PROFILE PRINT

Table of Contents

3-1/4” Frame w/o Fin (601205) Including Installation Strap 255475 3
3-1/4” Frame w/ Fin (601215) 4
68 mm Frame (554041) Including Installation Strap 255485 5
76 mm Frame (554121) 6
68 mm T-Mullion (541030) 7
86 mm T-Mullion (554091) 8
60 mm Z-Sash (554051) 9
74 mm Z-Sash (554081) 10
94 mm T-Sash / Outswing (541170) 11
98 mm Door Z-Sash (541130) 12
118 mm Door T-Sash / Outswing (541150) 13
62 mm Astragal (554230) 14
Astragal End Caps L / R (229117 / 229107) 15
T-Mullion End Caps L / R (254315 / 254315) 15
Distance Piece (241043) 15
Inswing Door Sub Sill (601225) 16
Outswing Door Sub Sill (601235) 16
Aluminum Threshold (260000) 16
End Caps for Aluminum Threshold L / R (269642 / 69632) 16
135º Bay Coupling (561760) 17
Corner Post (560290) 17
Expansion Joint (560014) 18
Steel Installation Bracket 1 / Expansion Joint (246545) 18
Distance Block (246691) 19
Seal for Expansion Joint (865520) 19
Steel Installation Bracket 2 / Expansion Joint (246535) 19
Sloped Aluminum Extension (601265) 20
Drip Rail / Aluminum (261768) 20
Screen Track / Sliding (601295) 20
Drip Rail (561510) 20
Drip Rail Attachment Button (264230) 20
6.5 mm Glazing Stop (560580) 21
14.5 mm Glazing Stop (560600) 21
14.5 mm Contoured Glazing Stop (561620) 21
18.5 mm Glazing Stop (560610) 21
30.5 mm Glazing Stop (561520) 21
External Reinforcement Cover (560015) 22
Coupling Profile / Chambered (561892) 22
H Connector / Chambered (560700) 22
Coupling Profile / Flat (732460) 22
Sill 36 (561860) 23
Sill 30 (561013) 23
Frame Extension 20 mm (561273) 23
4.8 mm Glazing Spline (864992) 24
5.8 mm Glazing Spline (865002) 24
5.8 mm Glazing Spline (865002) 24
6.8 mm Glazing Spline (865012) 24
7.8 mm Glazing Spline (865022) 24
Sash / Frame Seal (864952) 24
Astragal Seal (864940) 24
Door Threshold Seal (865070) 24
Door Threshold Seal / Inward (865570) 24
Transport Setting Block (561780) 25
Screen Frame / Horizontal (600796) 25
Screen Frame / Vertical (600806) 25
Sealing Support (561007) 25
Shim Support (268651) 25
Sloped Glazing Shim (541220) 25
Drain Cover Cap (261582) 25
10 mm Drain Cover Cap (645594) 25
Sash Ramp (260555) 25
Weldable Corners Z / T Door Sash (234300) 26
Weldable Corners Installation Tool (234310) 26
Mechanical Joint / Large Door T-Sash L / R (260243 / 260253) 27
Mechanical Joint / Small T-Mullion (247618) 27
Zinc Diecast Mechanical Joint / Large T-Mullion (261758) 27
Mechanical Joint / Large T-Mullion (247608) 27
6.6 mm Universal Fixture (268381) 27
Drill Jigs for Mechanical Joints (261907 / 268512) 27
Screw for Mechanical Joints 6.3 mm x 70 mm (260633) 27
Reinforcement (244506) 28
Reinforcement (244536) 28
Reinforcement (261801) 28
Reinforcement (255894) 28
Reinforcement (244496) 29
Reinforcement (268742) 29
Reinforcement (251886) 29
Reinforcement (259894) 30
Reinforcement (246525) 30
Reinforcement (252384) 30
Reinforcement (268742) 30
Reinforcement (251886) 31
Article List 32
Symbol Description 34

SYSTEM 4500
PROFILE PRINT

Frame

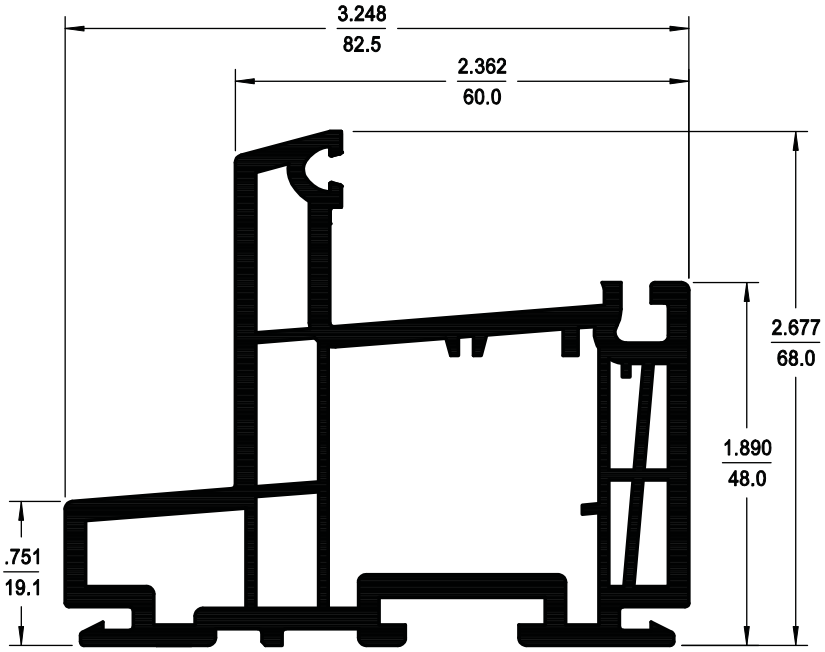

3-1/4" Frame w/o Fin
601205 WHT BG
RACK / MOD / PACK

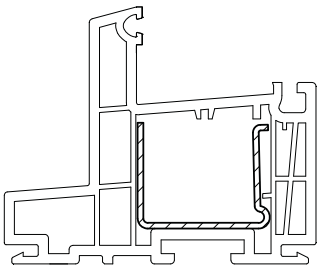

35 mm x 28 mm

	244506	244506
	1.5 mm	1.5 mm
Ix	2.50 cm^4	0.06 in^4
Iy	1.13 cm^4	0.03 in^4
	PACK	

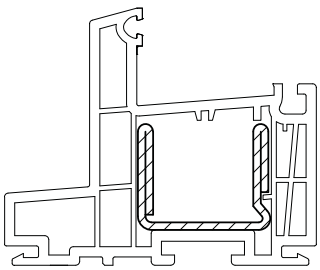

35 mm x 28 mm

	244536	244536
	2.0 mm	2.0 mm
Ix	5.0 cm^4	0.12 in^4
Iy	2.0 cm^4	0.05 in^4
	PACK	

Installation Strap for
3-1/4" Frame
255475

SYSTEM 4500
PROFILE PRINT

Frame

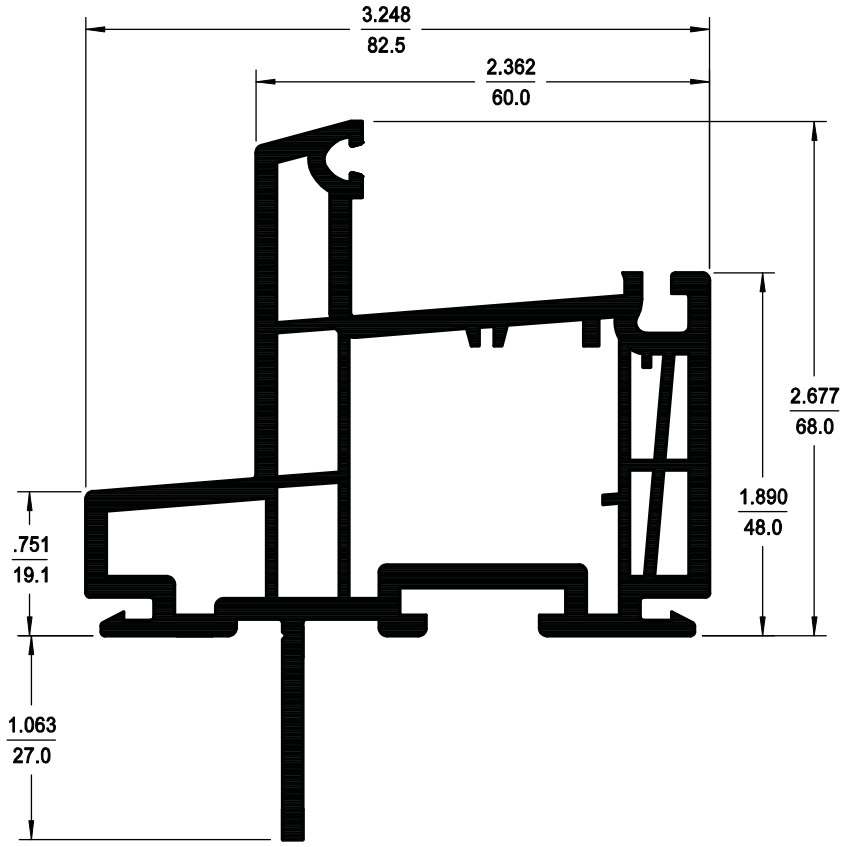

3-1/4" Frame w/ Fin

601215 WHT BG

RACK / MOD / PACK

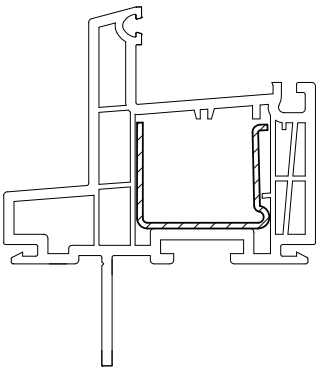

35 mm x 28 mm

	244506	244506
	1.5 mm	1.5 mm
Ix	2.50 cm^4	0.06 in^4
Iy	1.13 cm^4	0.03 in^4
	PACK	

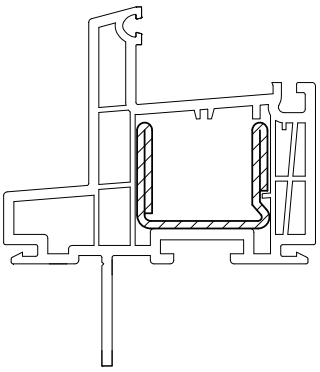

35 mm x 28 mm

	244536	244536
	2.0 mm	2.0 mm
Ix	5.0 cm^4	0.12 in^4
Iy	2.0 cm^4	0.05 in^4
	PACK	

SYSTEM 4500
PROFILE PRINT

Frame

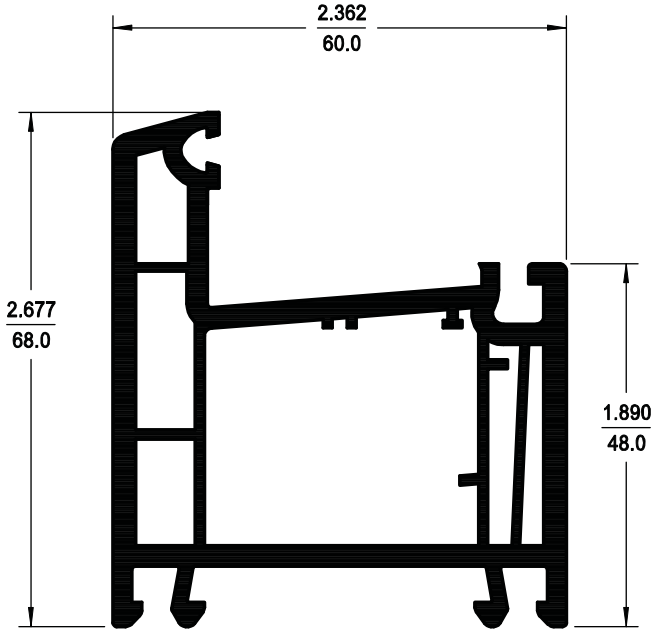

68 mm Frame
554041 WHT BG

PACK

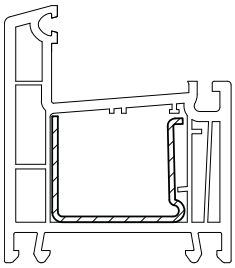

35 mm x 28 mm

	244506	244506
	1.5 mm	1.5 mm
Ix	2.50 cm^4	0.06 in^4
Iy	1.13 cm^4	0.03 in^4
	PACK	

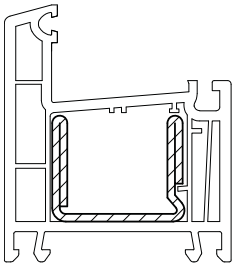

35 mm x 28 mm

	244536	244536
	2.0 mm	2.0 mm
Ix	5.0 cm^4	0.12 in^4
Iy	2.0 cm^4	0.05 in^4
	PACK	

Installation Strap for
60 mm Frame
255485

SYSTEM 4500
PROFILE PRINT

Frame

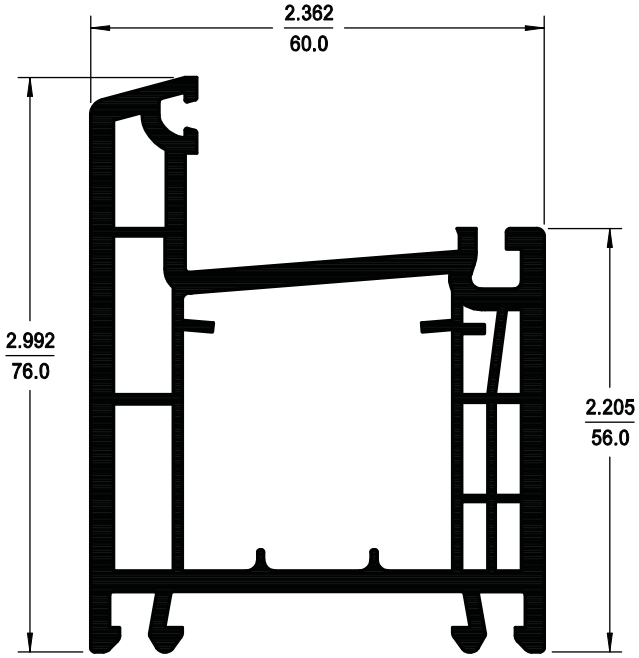

76 mm Frame
554121 WHT
PACK

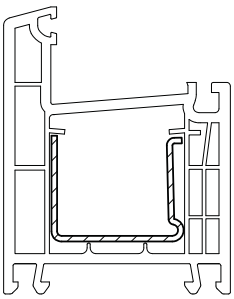

35 mm x 28 mm

	244506	244506
	1.5 mm	1.5 mm
Ix	2.50 cm⁴	0.06 in⁴
Iy	1.13 cm⁴	0.03 in⁴
	PACK	

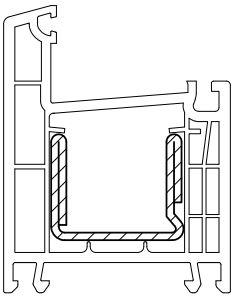

35 mm x 28 mm

	244536	244536
	2.0 mm	2.0 mm
Ix	5.0 cm⁴	0.12 in⁴
Iy	2.0 cm⁴	0.05 in⁴
	PACK	

SYSTEM 4500
PROFILE PRINT

T-Mullion

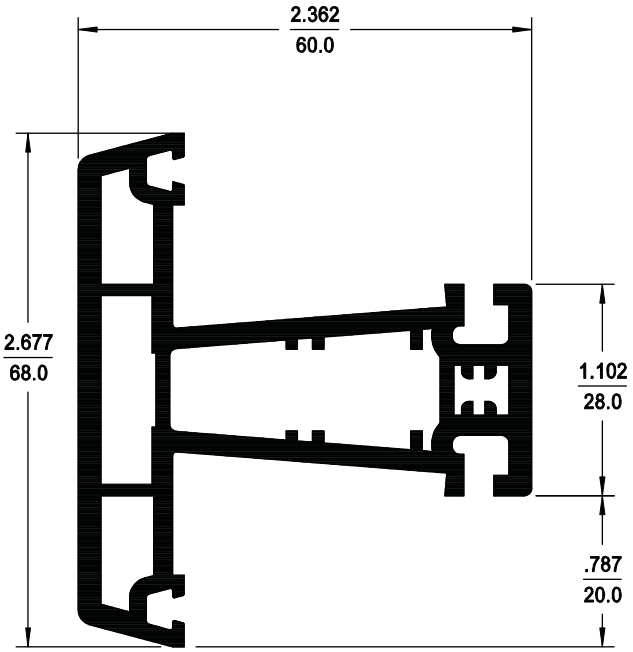

68 mm T-Mullion

541030 WHT BG

PACK

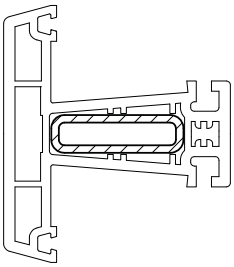

35 mm x 10 mm

	261801	261801
	2.0 mm	2.0 mm
Ix	1.83 cm^4	0.04 in^4
Iy	0.22 cm^4	0.01 in^4
	PACK	

SYSTEM 4500
PROFILE PRINT

T-Mullion

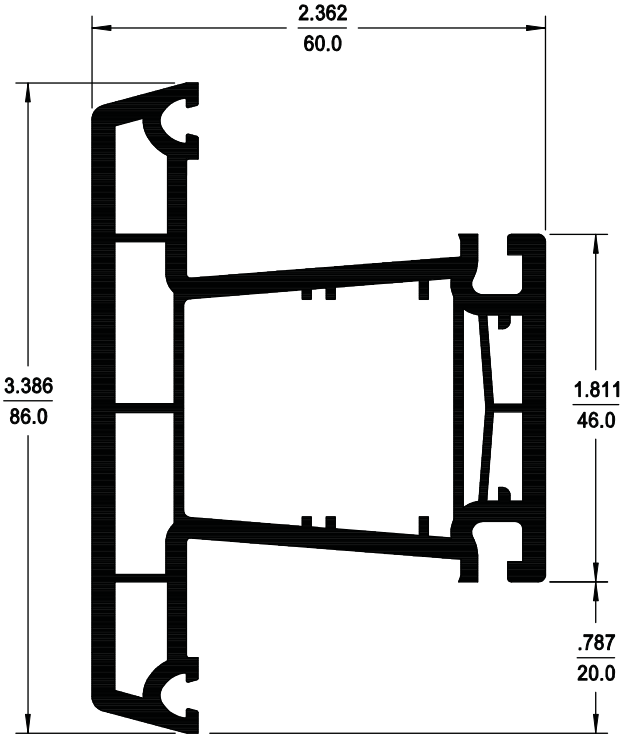

86 mm T-Mullion

554091 WHT BG

PACK

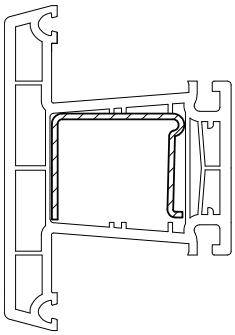

35 mm x 28 mm

	244506	244506
	1.5 mm	1.5 mm
Ix	2.50 cm^4	0.06 in^4
Iy	1.13 cm^4	0.03 in^4
	PACK	

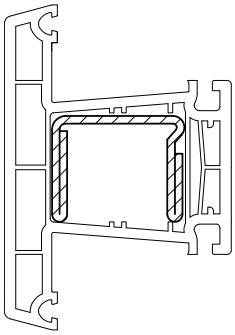

35 mm x 28 mm

	244536	244536
	2.0 mm	2.0 mm
Ix	5.0 cm^4	0.12 in^4
Iy	2.0 cm^4	0.05 in^4
	PACK	

SYSTEM 4500
PROFILE PRINT

Sash

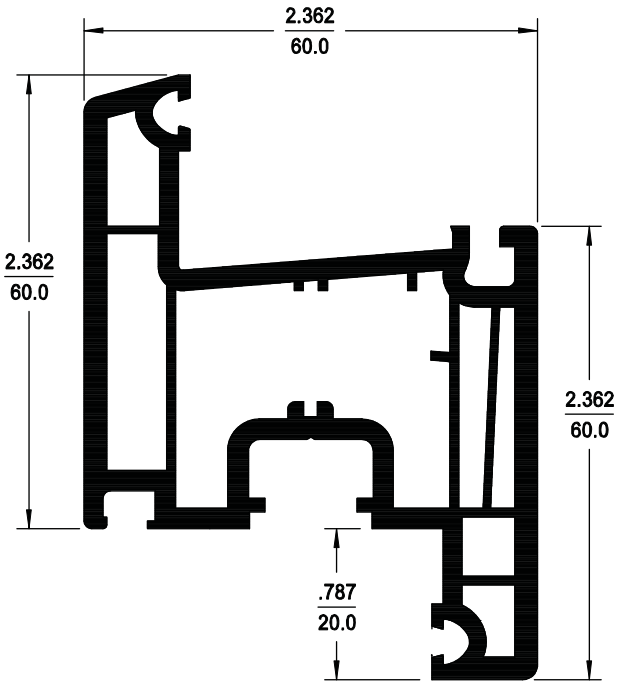

60 mm Z-Sash

554051 WHT BG

PACK

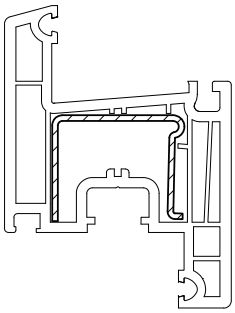

35 mm x 28 mm

	244506	244506
	1.5 mm	1.5 mm
Ix	2.50 cm^4	0.06 in^4
Iy	1.13 cm^4	0.03 in^4
	PACK	

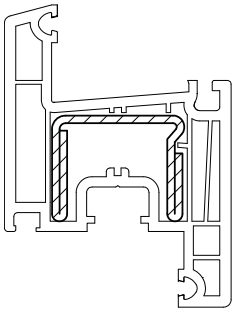

35 mm x 28 mm

	244536	244536
	2.0 mm	2.0 mm
Ix	5.0 cm^4	0.12 in^4
Iy	2.0 cm^4	0.05 in^4
	PACK	

SYSTEM 4500
PROFILE PRINT

Sash

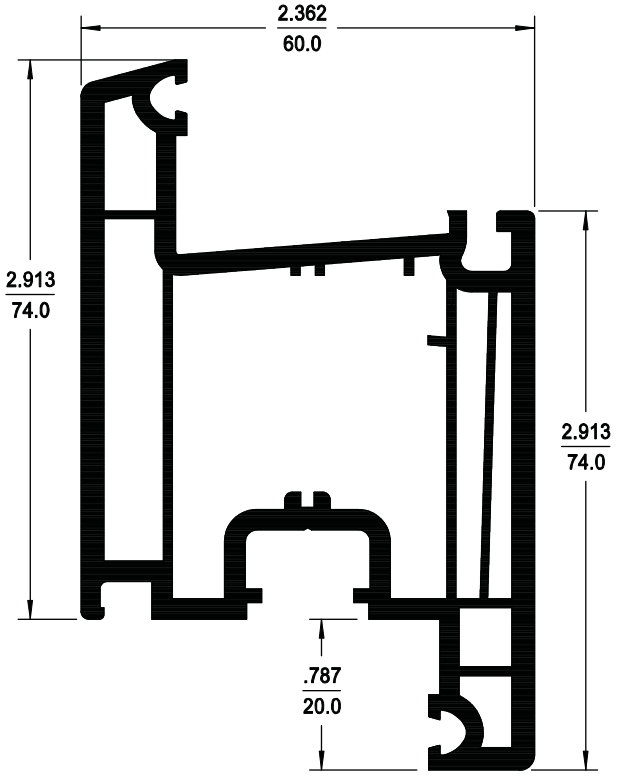

74 mm Z-Sash

554081 WHT

PACK

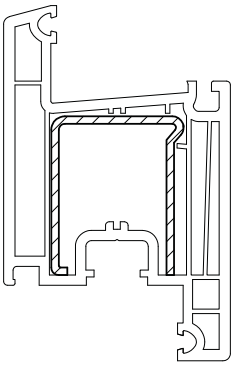

35 mm x 42 mm

	244496	244496
	2.0 mm	2.0 mm
Ix	4.49 cm^4	0.11 in^4
Iy	4.44 cm^4	0.11 in^4
	PACK	

SYSTEM 4500
PROFILE PRINT

Sash

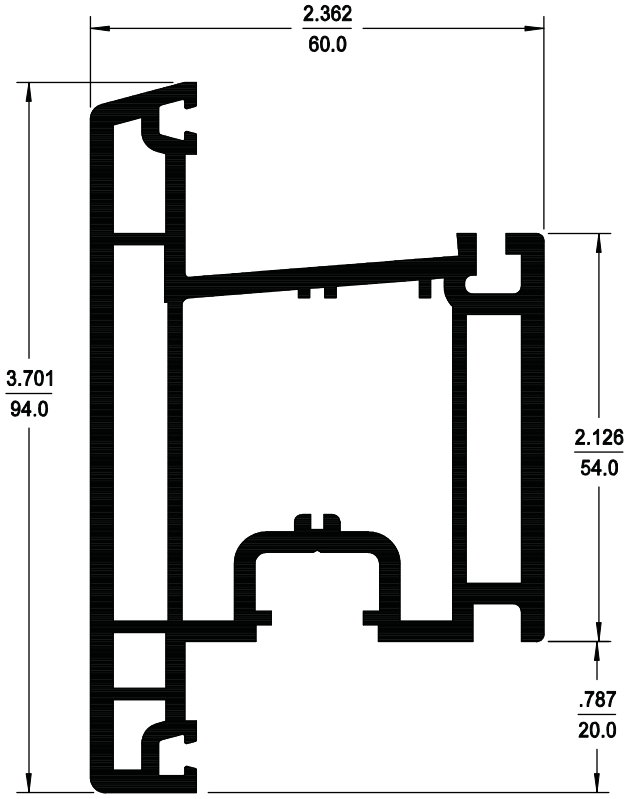

94 mm T-Sash / Outswing

541170 WHT

PACK

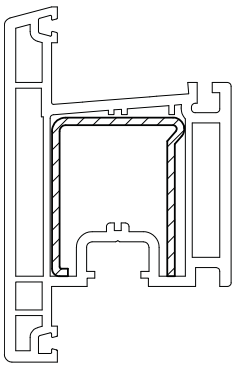

35 mm x 42 mm

	244496	244496
	2.0 mm	2.0 mm
Ix	4.49 cm^4	0.11 in^4
Iy	4.44 cm^4	0.11 in^4
	PACK	

SYSTEM 4500
PROFILE PRINT

Sash

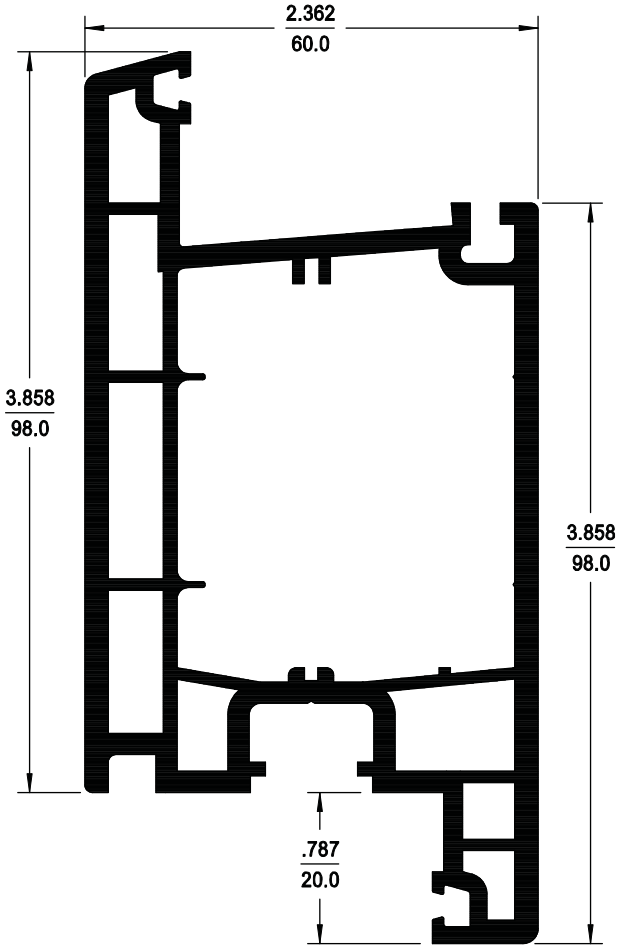

98 mm Door Z-Sash

541130 WHT BG

PACK

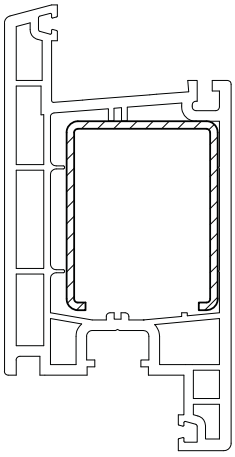

40 mm x 50 mm

	268742	268742
	2.0 mm	2.0 mm
Ix	8.07 cm⁴	0.19 in⁴
Iy	7,85 cm⁴	0.19 in⁴
	PACK	

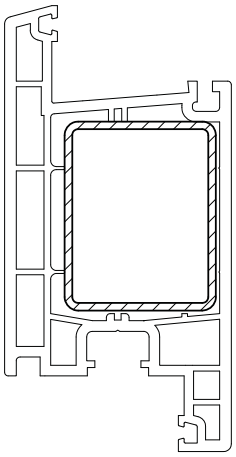

40 mm x 50 mm

	251886	251886
	2.0 mm	2.0 mm
Ix	8.44 cm⁴	0.20 in⁴
Iy	11.9 cm⁴	0.29 in⁴
	PACK	

SYSTEM 4500
PROFILE PRINT

Sash

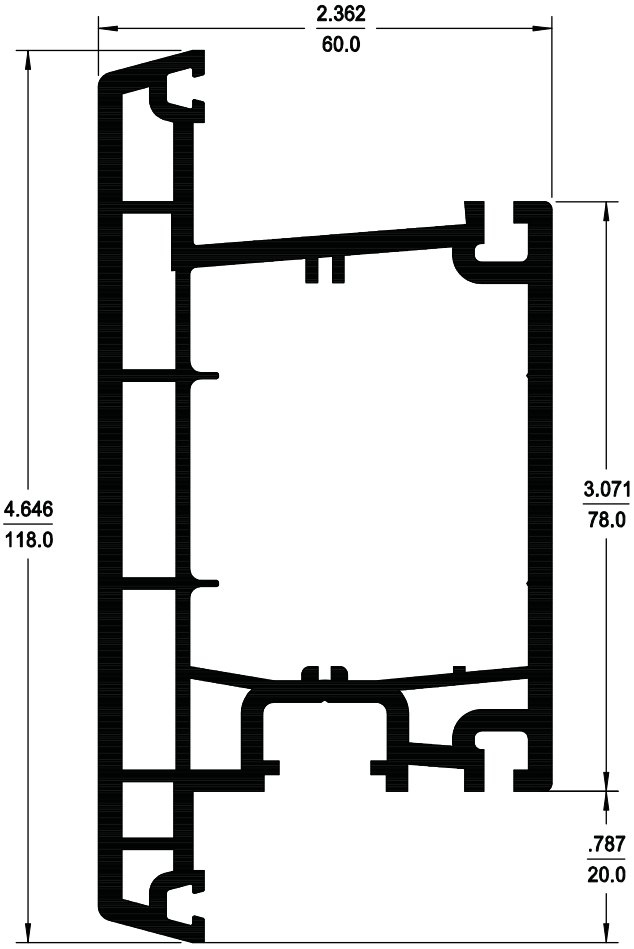

118 mm Door T-Sash
Outswing
541150 WHT BG

PACK

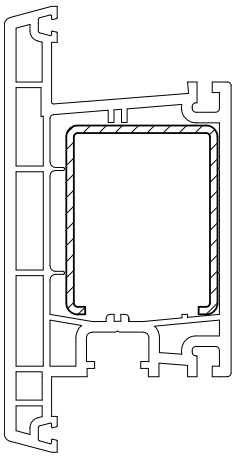

40 mm x 50 mm

	268742	268742
	2.0 mm	2.0 mm
Ix	8.07 cm^4	0.19 in^4
Iy	7.85 cm^4	0.19 in^4
	PACK	

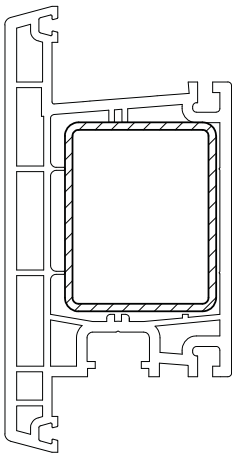

40 mm x 50 mm

	251886	251886
	2.0 mm	2.0 mm
Ix	8.44 cm^4	0.29 in^4
Iy	11.9 cm^4	0.20 in^4
	PACK	

SYSTEM 4500
PROFILE PRINT

Astragal

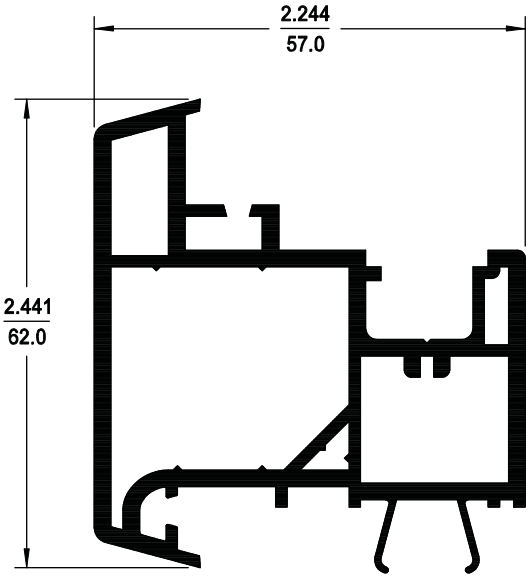

62 mm Astragal
554230 WHT

PACK

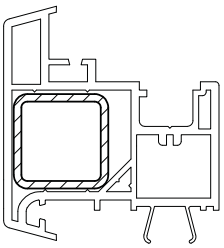

25 mm x 25 mm

	255894	255894
	2.0 mm	2.0 mm
Ix	1.53 cm^4	0.04 in^4
Iy	1.53 cm^4	0.04 in^4
	PACK	

SYSTEM 4500
PROFILE PRINT

Astragal End Cap

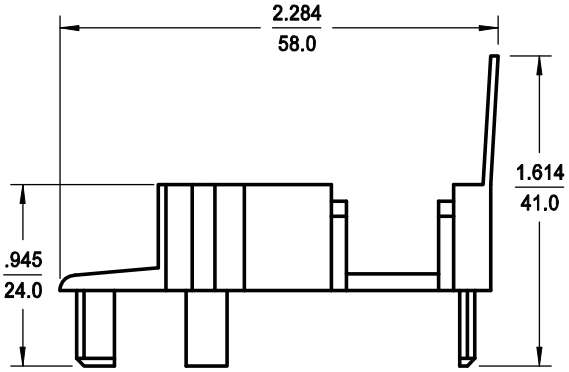

Astragal End Cap

229117 WHT

229107 WHT

BOX

Note: for 554230 Astragal

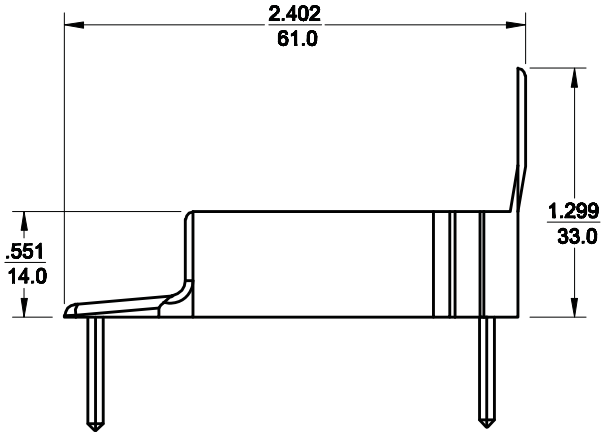

T-Mullion End Cap

254315 WHT BG

254315 WHT BG

Other colors available

BOX

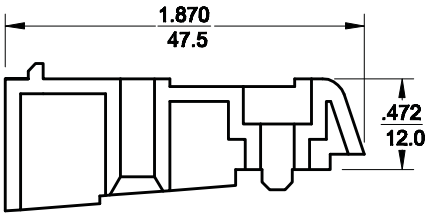

Distance Piece

241043

BOX

SYSTEM 4500
PROFILE PRINT

Door Sills / Thresholds

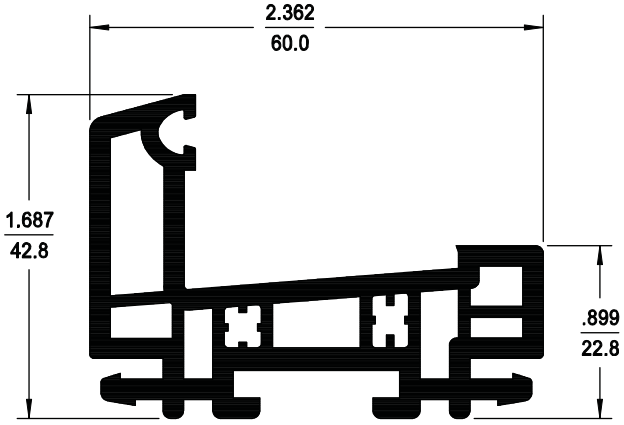

Inswing Door Sub-Sill
601225 WHT BG

PACK

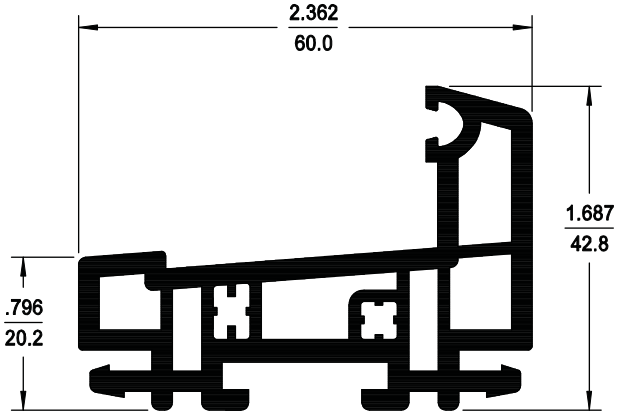

Outswing Door Sub-Sill
601235 WHT BG

PACK

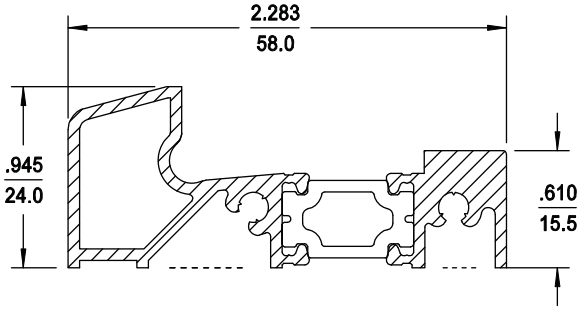

Aluminum Threshold
260000

PACK

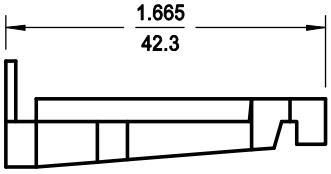

End Cap for Aluminum Threshold
269632 WHT
269642 WHT

BOX

Coupling Profiles

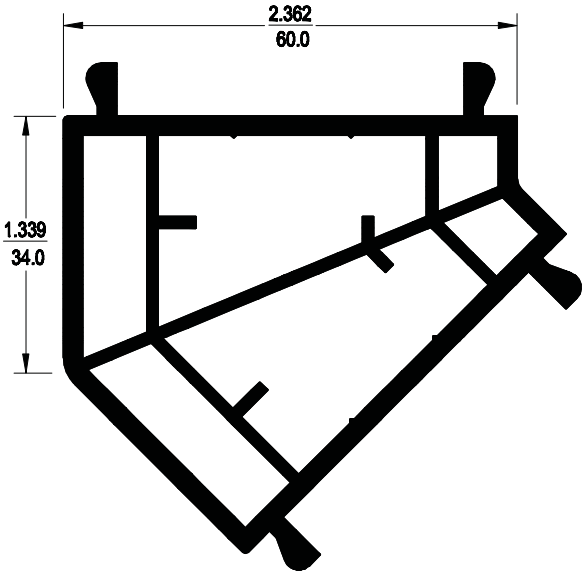

135° Bay Coupling
561760 WHT

PACK

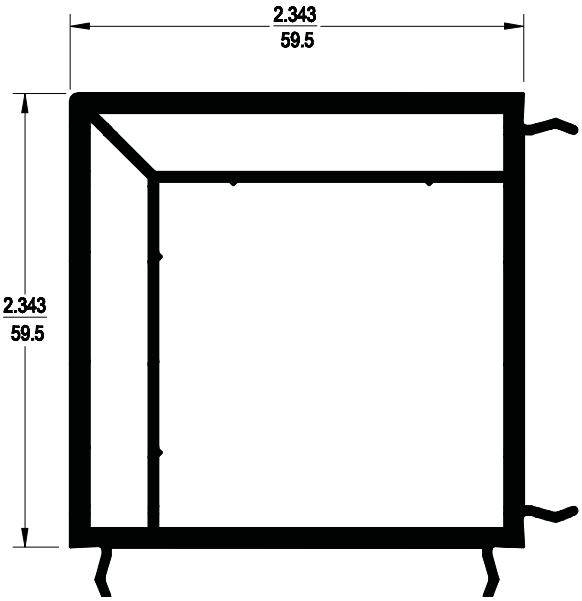

Corner Post
560290 WHT

PACK

Expansion Joint

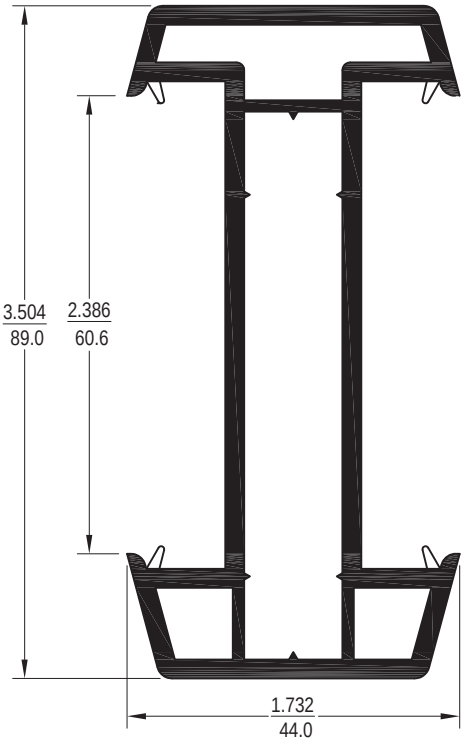

Expansion Joint
560014 WHT

PACK

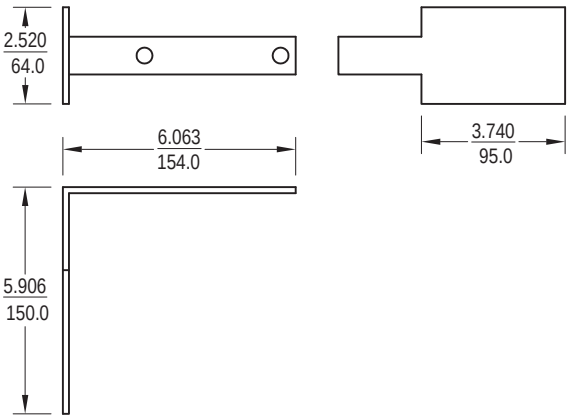

Steel Installation Bracket 1
for Expansion Joint
246545

BOX

Expansion Joint

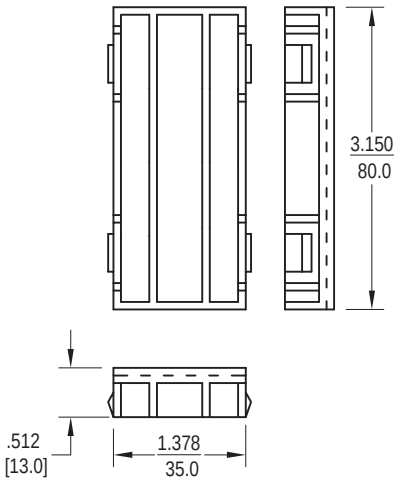

Distance Block
246691

BOX

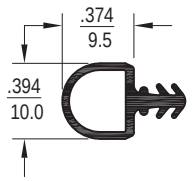

Seal for Expansion Joint
865520 BLK

BOX

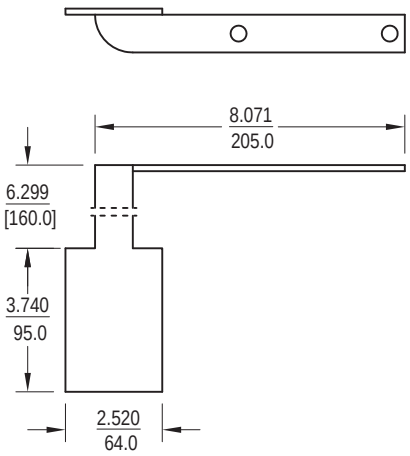

Steel Installation Bracket 2
for Expansion Joint
246535

BOX

SYSTEM 4500
PROFILE PRINT

Supplementary Door Articles

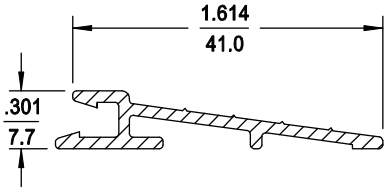

Sloped Aluminum Extension
601265
PACK

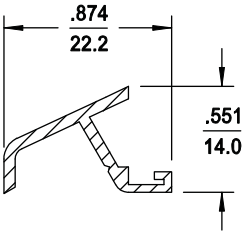

Drip Rail / Aluminum
261768
PACK

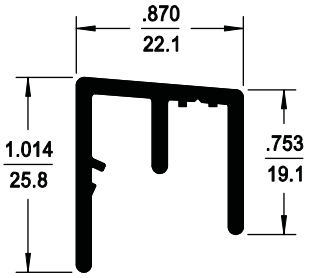

Screen Track / Sliding
601295 WHT BG
PACK

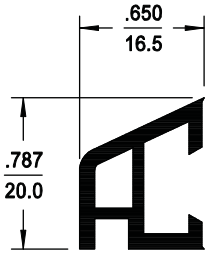

Drip Rail
561510 WHT
PACK

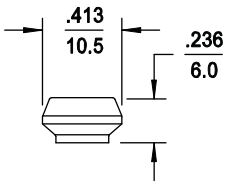

Drip Rail Attachment Button
264230 WHT
BOX

SYSTEM 4500
PROFILE PRINT

Glazing Stops

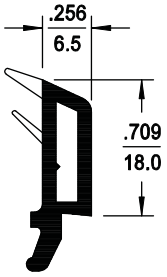

6.5 mm Glazing Stop
560580 WHT

PACK

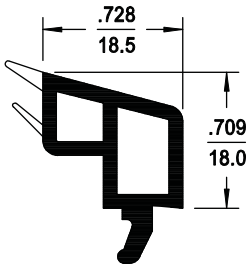

18.5 mm Glazing Stop
560610 WHT

PACK

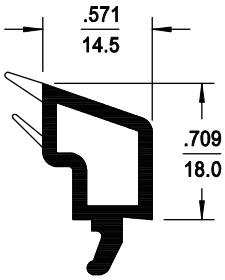

14.5 mm Glazing Stop
560600 WHT BG

PACK

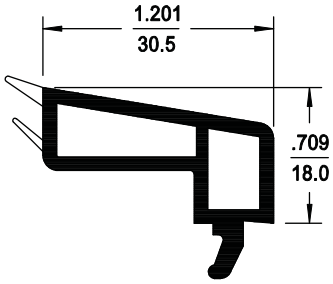

30.5 mm Glazing Stop
561520 WHT

PACK

Note: All glazing seals are BLACK

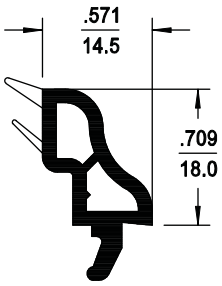

14.5 mm Contoured Glazing Stop
561620 WHT

PACK

Reinforcement / Coupling Profiles

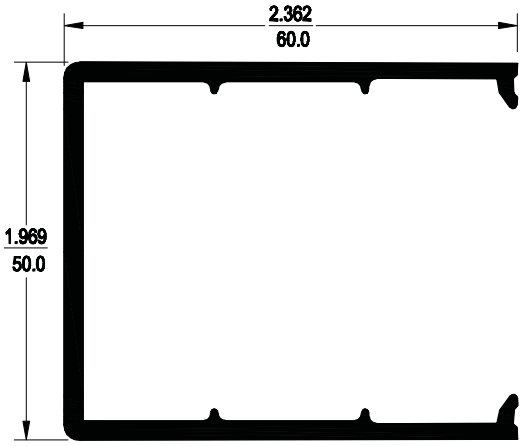

External Reinforcement Cover
560015 WHT

PACK

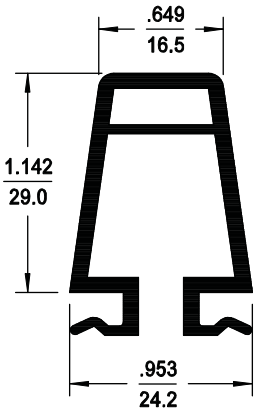

Coupling Profile / Chambered
561892 WHT

PACK

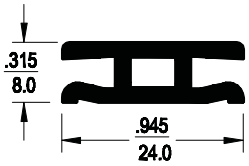

H-Connector / Chambered
560700 WHT

PACK

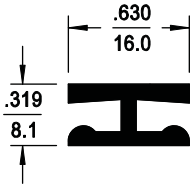

Coupling Profile / Flat
732460 WHT

PACK

Sill Profiles / Extension Profiles

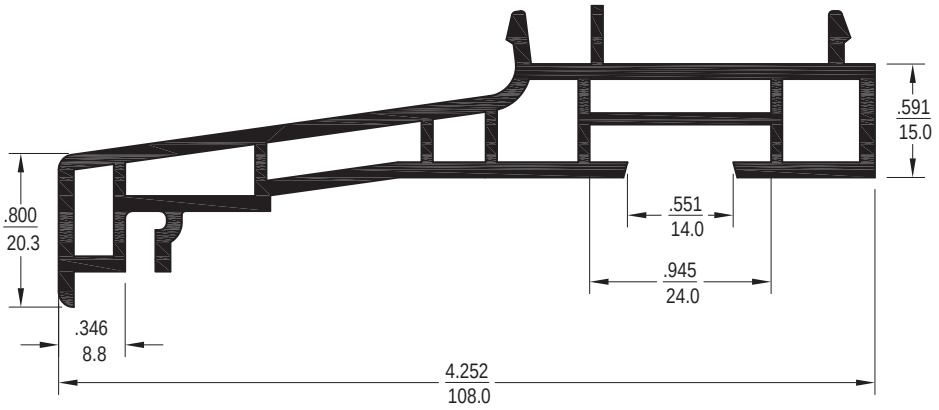

Sill 36
561860 WHT

PACK

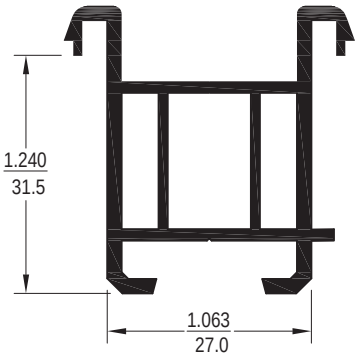

Sill 30
561013 WHT

PACK

Frame Extension 20 mm
561273 WHT

PACK

SYSTEM 4500
PROFILE PRINT

Glazing Splines and Seals

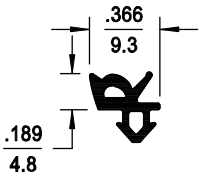

4.8 mm Glazing Spline
864992 BLK
BOX

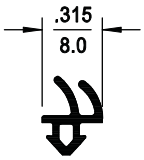

Sash / Frame Seal
864952 BLK
BOX

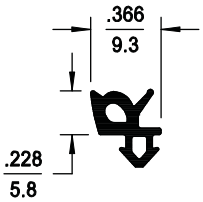

5.8 mm Glazing Spline
865002 BLK
BOX

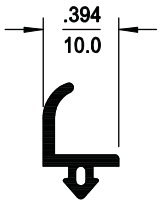

Astragal Seal
864940 BLK
BOX

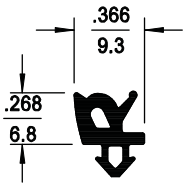

6.8 mm Glazing Spline
865012 BLK
BOX

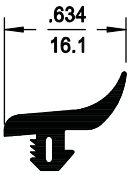

Door Threshold Seal
865070 BLK
BOX

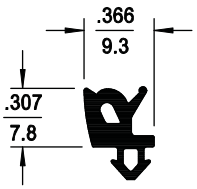

7.8 mm Glazing Spline
865022 BLK
BOX

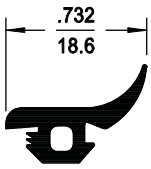

Door Threshold Seal / Inward
865570 BLK
BOX

SYSTEM 4500
PROFILE PRINT

Supplementary Articles

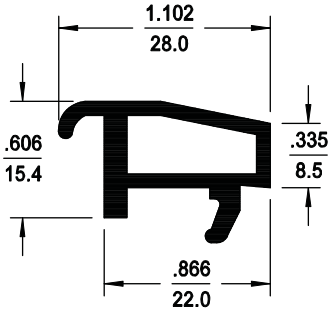

Transport Setting Block
561780 WHT
PACK

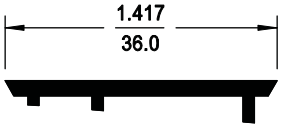

Sloped Glazing Shim
541220 WHT
PACK

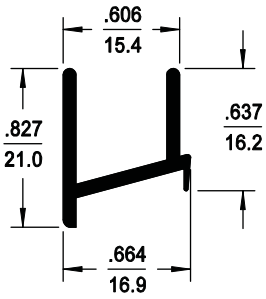

Screen Frame / Horizontal
600796 WHT BG
PACK

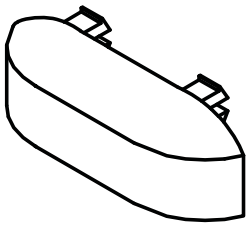

Drain Cover Cap
261582 WHT
Other colors available
BOX

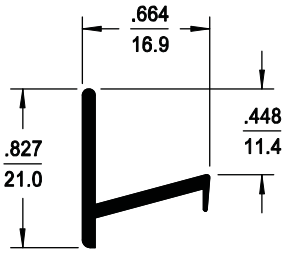

Screen Frame / Vertical
600806 WHT BG
PACK

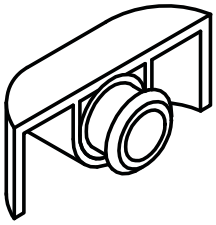

10 mm Drain Cover Cap
645594 WHT
Other colors available
BOX

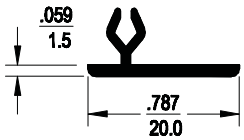

Sealing Support
561007
PACK

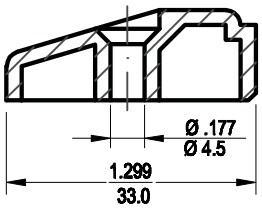

Sash Ramp
260555 WHT

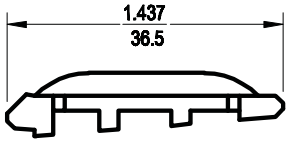

Shim Support
268651

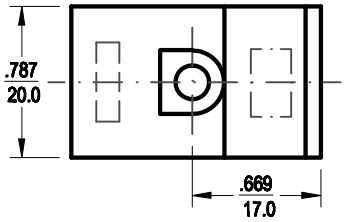

Weldable Corners

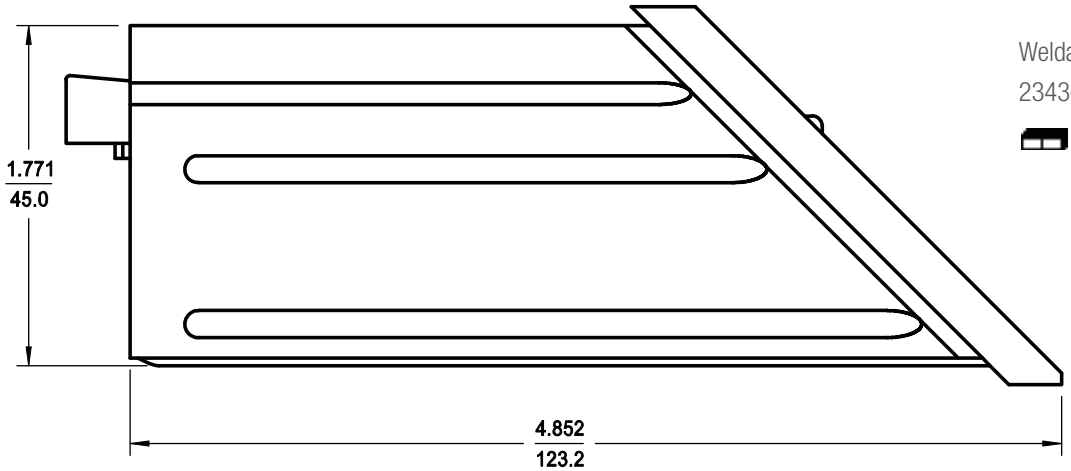

Weldable Corners / Z & T Door Sash
234300 WHT
BOX

Weldable Corner Installation Tool
234310
BOX

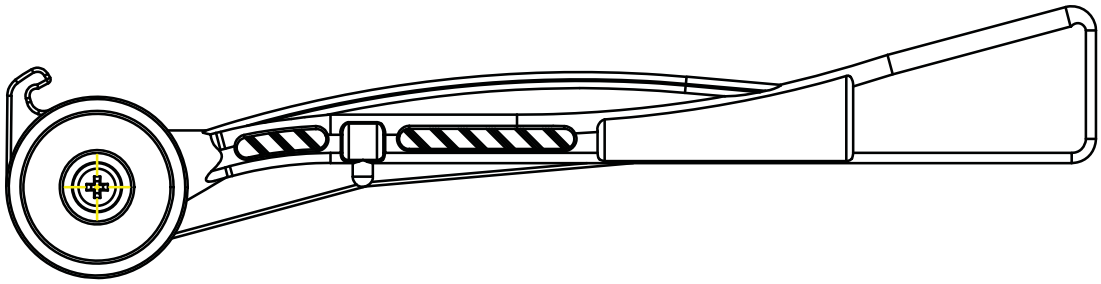

Mechanical Joints

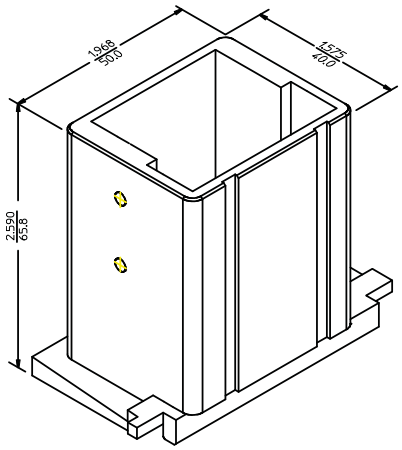

Mechanical Joint / Large Door T-Sash

260243 WHT

260253 WHT

BOX

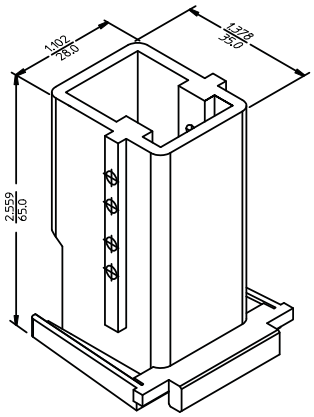

Mechanical Joint / Large T-Mullion

247608 WHT

BOX

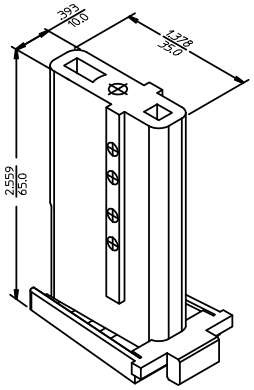

Mechanical Joint / Small T-Mullion

247618 WHT

BOX

6.6 mm Universal Fixture

268381 WHT

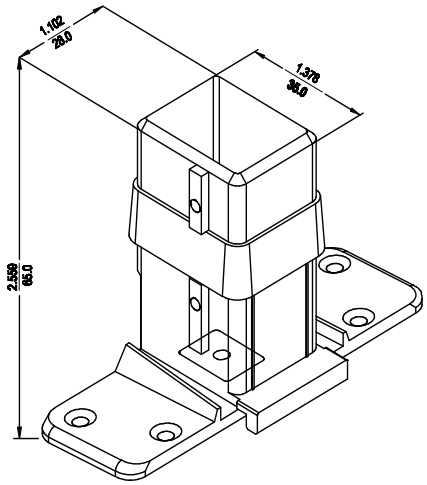

Zinc Diecast Mechanical Joint / Large T-Mullion

261758

Yellow Chromate

BOX

Drill Jigs for Mechanical Joints

261907 and 268512

Screws for Mechanical Joints 6.3 mm x 70 mm

260633

BOX

SYSTEM 4500
PROFILE PRINT

Steel Reinforcements

	Art. No.	Weight (kg/m)	Wall Thickness	Wind Load Ix cm^4	Glass Load Iy cm^4	Wind Load Ix in^4	Glass Load Iy in^4
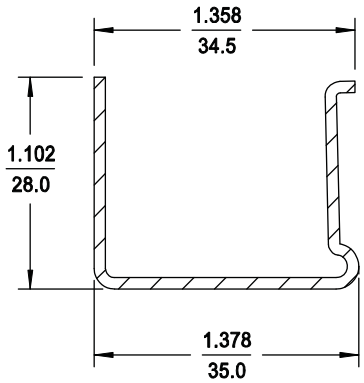	244506	1.05	1.5 mm	2.50	1.13	0.060	0.027
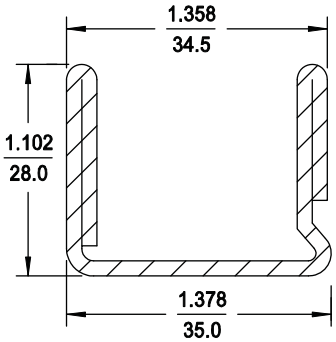	244536	1.99	2.0 mm	4.96	1.98	0.119	0.048
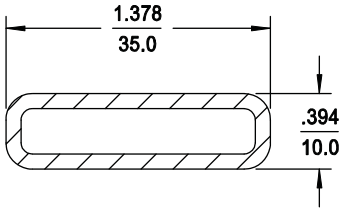	261801	1.22	2.0 mm	1.83	0.22	0.044	0.005
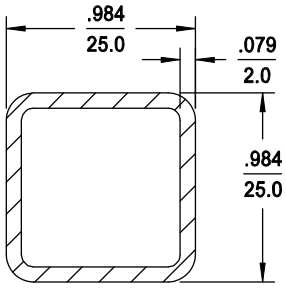	255894	1.39	2.0 mm	1.53	1.53	0.037	0.037

SYSTEM 4500
PROFILE PRINT

Steel Reinforcements

	Art. No.	Weight (kg/m)	Wall Thickness	Wind Load Ix cm^4	Glass Load Iy cm^4	Wind Load Ix in^4	Glass Load Iy in^4
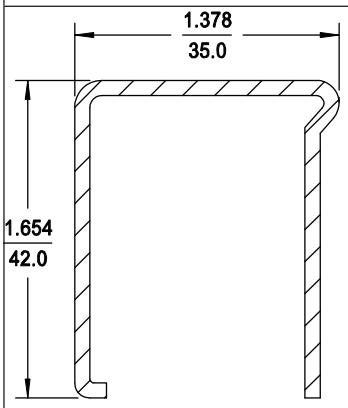	244496	1.82	2.0 mm	4.49	4.44	0.108	0.107
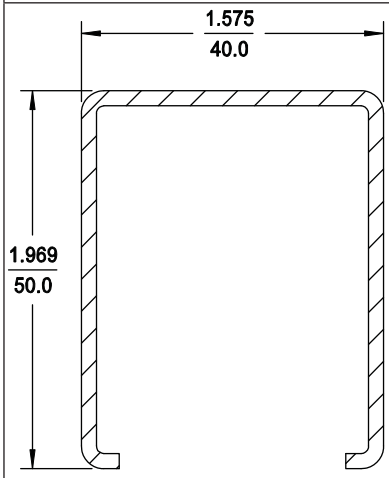	268742 (Appl. for Sash 541130 or 541150)	2.18	2.0 mm	8.07	7.85	0.194	0.189
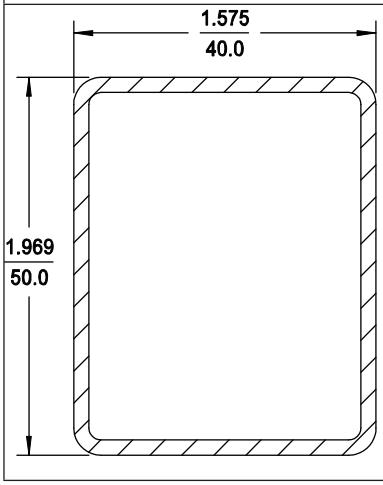	251886 (Appl. for Sash 541130 or 541150)	2.64	2.0 mm	8.44	11.93	0.203	0.287

SYSTEM 4500
PROFILE PRINT

Steel Reinforcements

	Art. No.	Weight (kg/m)	Wall Thickness	Wind Load I_X cm^4	Glass Load I_Y cm^4	Wind Load I_X in^4	Glass Load I_Y in^4
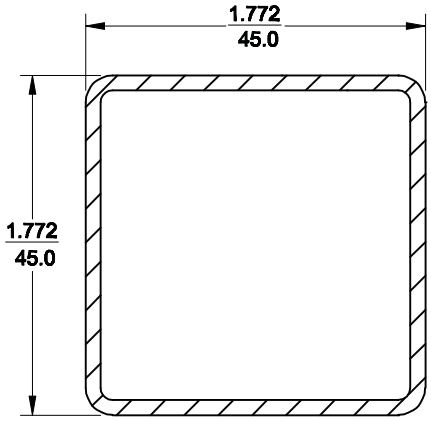	259894	2.64	2.0 mm	10.19	10.19	0.245	0.245
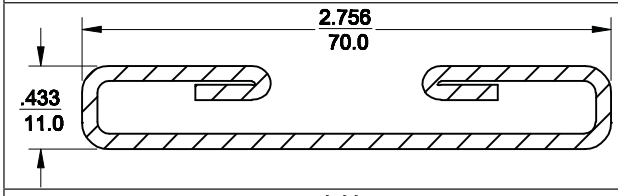	246525	2.34	2.0 mm	14.45	0.49	0.347	0.012
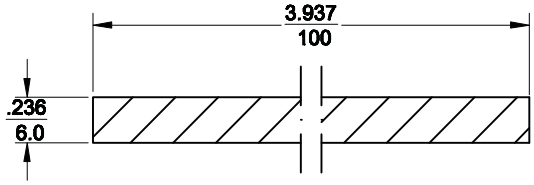	252384	4.72	6.0 mm	50.00	0.18	1.201	0.004
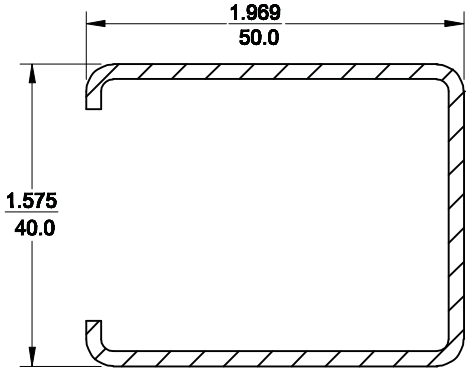	268742 (Appl. for 560015)	2.18	2.0 mm	7.85	8.07	0.189	0.194

Steel Reinforcements

	Art. No.	Weight (kg/m)	Wall Thickness	Wind Load I_X cm^4	Glass Load I_Y cm^4	Wind Load I_X in^4	Glass Load I_Y in^4
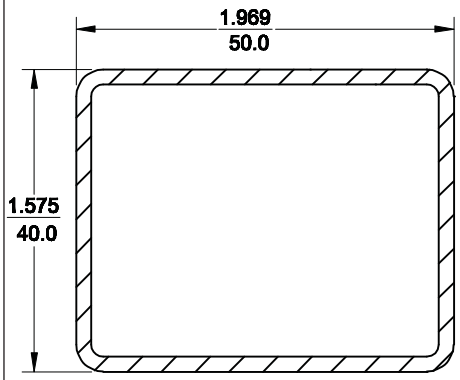	251886 (Appl. for 560015)	2.64	2.0 mm	11.93	8.44	0.287	0.203

Article List

Article #	Description	Unit of Measure	Pack Qty	Rack Qty	Carton/Box Qty	Page
229107	Astragal End Cap, Right	Pc			100	15
229117	Astragal End Cap, Left	Pc			100	15
234300	Weldable Corners / Z & T Door Sash	Pc			16	26
234310	Weldable Corner Installation Tool	Pc			1	26
241043	Distance Piece	Pc			20	15
244496	35 mm x 42 mm x 2 mm Steel Reinforcement	M	6	600		29
244506	35 mm x 28 mm x 1.5 mm Steel Reinforcement	M	6	1176		28
244536	35 mm x 28 mm x 2 mm Steel Reinforcement	M	6	600		28
246525	70 mm x 11 mm Steel Reinforcement for Article 560014	M	6	300		30
246535	Steel Installation Bracket 2 for Expansion Joint	Pc			50	19
246545	Steel Installation Bracket 1 for Expansion Joint	Pc			50	18
246691	Distance Block	Pc			100	19
247608	Mechanical Joint / Large T-Mullion	Pc			100	27
247618	Mechanical Joint / Small T-Mullion	Pc			100	27
251886	50 mm x 40 mm x 2mm Steel Reinforcement	M	6	600		29/31
252384	100 mm x 6 mm Steel Reinforcement	M	72			30
254315	T-Mullion End Cap Right / Left Set	Pc	100			15
255475	Installation Strap for 3 1/4“ Frame	Pc			200	3
255485	Installation Strap for 60 mm Frame	Pc			200	5
260000	Aluminum Threshold	M	36	600		16
260243	Mechanical Joint / Door Sash T118 Left	Pc			50	27
260253	Mechanical Joint / Door Sash T118 Right	Pc			50	27
260555	Sash Ramp	Pc			100	25
260633	Screw for Mechanical Joint	Pc			250	27
261582	Drain Cover Cap	Pc			1000	25
261758	Zinc Diecast Mechanical Joint for Large T-Mullion	Pc			500	27
261768	Drip Rail / Aluminum	M	6			20
261801	35 mm x 10 mm x 2 mm Steel Reinforcement	M	6	1800		28
261907	Drill Jig for Mechanical Joint / Fame	Pc			1	27
264230	Drip Rail Attachment Button	Pc			1000	20
268381	6.6 mm Universal Fixture Piece for T-mullion	Pc			500	27
268512	Drill Jig for Mechanical Joint / Mullion				1	27
268651	Shim Support	Pc			1000	25
268742	40 mm x 50 mm x 2 mm Steel Reinforcement	M	36	1200		29/30
269632	End Cap for Aluminum Threshold-Right	Pc			50	16
269642	End Caps for Aluminum Threshold-Left	Pc			50	16
541030	68 mm T-Mullion	M	36	576		7
541130	98 mm Door Z-Sash	M	19.5	351		12
541150	118 mm Door T-Sash	M	13	338		13
541170	94 mm T-Sash/Outswing	M	24	384		11
541220	Sloped Glazing Shim	M	72	1152		25
554041	68 mm Frame	M	36	576		5
554051	60 mm Z-Sash	M	36	540		9

Article List

Article #	Description	Unit of Measure	Pack Qty	Rack Qty	Carton/Box Qty	Page
554041	68 mm Frame	M	36	576		5
554081	74 mm Z-Sash	M	36	2016		10
554091	86 mm T-Mullion	M	36	432		8
554121	76 mm Frame	M	36	360		6
554230	62 mm Astragal	M	36	648		14
560014	Expansion Joint	M	24	600		18
560015	External Reinforcement Cover	M	39	6000		22
560290	Corner Post	M	36	3240		17
560580	6.5 mm Glazing Stop	M	144	3312		21
560600	14.5 mm Glazing Stop	M	144	7488		21
560610	18.5 mm Glazing Stop	M	144	2880		21
560700	H-Connector / Chambered	M	144	5760		22
561007	Sealing Support	M	144	15264		25
561013	Sill 30	M	72	1728		23
561273	Frame Extension 20	M	48	1536		23
561510	Drip Rail	M	144	576		20
561520	30.5 mm Glazing Stop	M	144	3600		21
561620	14.5 mm Contoured Glazing Stop	M	144	1728		21
561760	1350 Bay Coupling	M	36	576		17
561780	Transport Setting Block	FT	384			25
561860	Sill 36	M	36	720		23
561892	Coupling Profile / Chambered	M	72	2520		22
600796	Screen Frame / Horizontal	FT	500	10000		25
600806	Screen frame / Vertical	FT	500	20000		25
601205	3 1/4“ Frame w/o Fin	FT	40	1680		3
601215	3 1/4“ Frame w/ Fin	FT	40	1260		4
601225	Inswing Door Sub-Sill	FT	120	3000		16
601235	Outswing Door Sub-Sill	FT	120	2040		16
601265	Sloped Aluminum Extension	FT	400	1200		20
601295	Screen Track / Sliding	FT	400	4000		20
645594	10 mm Drain Cover Cap	Pc			1000	25
732460	Coupling Profile / Flat	M	144	10512		22
864940	Astragal Seal	M	200	5000		24
864952	Sash / Frame Seal	M	400	12000		24
864992	4.8 mm Glazing Spline (#65)	M	300	4800		24
865002	5.8 mm Glazing Spline (#66)	M			300	24
865012	6.8 mm Glazing Spline (#67)	M			300	24
865022	7.8 mm Glazing Spline (#68)	M			300	24
865070	Door Threshold Seal	M			50	24
865520	Seal For Expansion Joint	M	200	4000		19
865570	Door Threshold Seal / Inward	M			150	24

SYSTEM 4500
PROFILE PRINT

Article List

Color Black
Color Gray
Color While
Color Creme
Color Brown
Color Caramel
Color Green
Color Red
Color Silver
Random Color
Aluminium Anodized
Aluminium Mill Finish
Foiled Variant
Painted Variant
Packaging (Details See Article List)
Wall Thickness Millimeters
With Weldable Seal
Manually Inserted Seal
Right Hand
Left Hand
@ Non Standard, Delivery Time To Be Requested
Ix Moment of Inertia Along X-Axis in cm^4
Iy Moment of Inertia Along Y-Axis in cm^4

To be Glued w/ PVC Glue
To be Sealed w/ Silicon Sealent
To be Sealed w/ EPDM Sealent
To be Glued w/ EPDM Glue
Profile Perimeter Millimeters
Drill Jig
A-Denotes Dimension Inches
B-Denotes Dimension Millimeters

For updates to this publication, visit **na.rehau.com/resourcecenter**

The information contained herein is believed to be reliable, but no representations, guarantees or warranties of any kind are made as to its accuracy, suitability for particular applications or the results to be obtained therefrom. Before using, the user will determine suitability of the information for user's intended use and shall assume all risk and liability in connection therewith. To the extent permitted by law, REHAU EXPRESSLY DISCLAIMS ALL IMPLIED WARRANTIES, INCLUDING BUT NOT LIMITED TO, ANY IMPLIED WARRANTIES OF MERCHANTABILITY OR OF FITNESS FOR A PARTICULAR PURPOSE.

© REHAU Incorporated 2008

www.rehau.com

rehau.mailbox@rehau.com

4500.100 US/en 04.08

For updates to this publication, visit **na.rehau.com/resourcecenter**

The information contained herein is believed to be reliable, but no representations, guarantees or warranties of any kind are made as to its accuracy, suitability for particular applications or the results to be obtained therefrom. Before using, the user will determine suitability of the information for user's intended use and shall assume all risk and liability in connection therewith. To the extent permitted by law, REHAU EXPRESSLY DISCLAIMS ALL IMPLIED WARRANTIES, INCLUDING BUT NOT LIMITED TO, ANY IMPLIED WARRANTIES OF MERCHANTABILITY OR OF FITNESS FOR A PARTICULAR PURPOSE.

© REHAU Incorporated 2008

www.rehau.com

rehau.mailbox@rehau.com

4500.100 US/en 04.08